POWERLINK
Power Systems

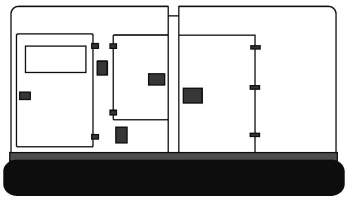

Generator set
Sound-proof type
E1000JS-T

SPECIFICATIONS

www.powerlinkworld.com

T5F series
E1000JS, Tier 5 Final
60 Hz @ 1800rpm,3-phase/4-wiring

1 Standards & Conditions

Design Standards

The designs and the productions are in conformity with:

- Conformite Europeenne (CE)
- ISO8528-5:2005
- GB/T2820.5-2009

Electrical devices have obtained the certification of:

- CSA
- UL

Environmental Operating Conditions

- Installation place: Outdoors or indoors (well ventilated).
- Ambient temperature: -25℃ to 50℃. The coolant heater is needed when the temperature is below 5℃
- Humidity: Less than 80%.
- Altitude: Below one thousand (1000) meters.

Factory Inspection

- Inspection items.
- Protection devices working test.
- Starting ability in normal temperature.
- 50% rated power load moment capability.
- Voltage deviation and speed variation: 0%, 25%, 50%, 75%, 100%, 110% Load.

Painting Process

- Painting process specifications and colors are based on the manufacturer's standard.
- The customer could also choose the color which the manufacturer offers.

2 General Features

- Johndeere engine 6136CG550
- Close coupled to Leroy Somer alternator LSA47.3M8
- Intelligent control module PLC-500
- ABB main circuit breaker: 1600A
- Rotate speed governor: ECU
- Exhaust gas purification system with DOC and SCR
- Excitation system: Self excited, SHUNT
- Key switch
- Emergency stop switch
- ATS (automatic transfer switch) receptacle
- 2x12V/120AH battery and charger
- Lockable battery isolator switch
- Power coated canopy
- 50℃ radiator
- Oil pump on the engine
- Steel base frame
- Vibration isolators between the engine/alternator and base frame
- Dry type air filter
- Base fuel tank for 12 hours running
- Drain points for fuel tank
- Operation Manual / Specifications

3 Equipment Specification

General technical data

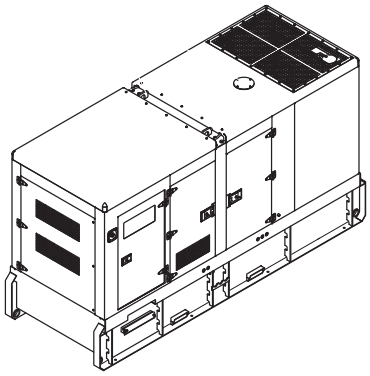

Model..... E1000JS-T

Structure type ..... C/TWINS

Tank capacity..... 1600L

Dry weight..... 8500kg

Sound pressure level @7m 76dBA

Dimensions L×W×H.....6058x2438x2591mm

Prime Power 1000kVA/800kW

Standby Power 1100kVA/880kW

Voltage	416V	440V	460V	480V
Ampere	1387.9A	1312.2A	1255.1A	1202.8A

Genset Fuel Consumption					
Frequency/Load	25%	50%	75%	100%	110%
60Hz (L/h)	65.6	113.2	154	200	220

Power System

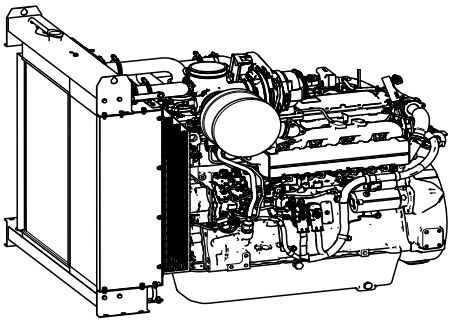

Engine Manufacturer/Brand.....Johndeere
Engine Model..... 6136CG550
Dimensions L×W×H.....1498×890×1367mm
Dry Weigh (approx.) 1521Kg
Number of Cylinders.....6
Bore 132mm
Stroke 165mm
Displacement.....13.55L
Compression Ratio 15.9
Type of injection..... High pressure common rail
Intake System..... Turbocharged
Intake Resistance .....≤6.25kPa
Cooling System .....Water cooled
Fan ..... Pusher
Battery Voltage 24V
Type of Fuel..... Ultra Low Sulfur Fuel Only
Type of Oil .....Class CJ-4/CK-4 oil as per API classification
Oil Capacity 40.0L
Type of Coolant ..... Glycol mixture
Engine Coolant Capacity 27.3L
Back Pressure .....≤ 7.5kPa
Standby Power 505kW
Prime Power 462kW
Fuel Consumption(100%load) 100L/h

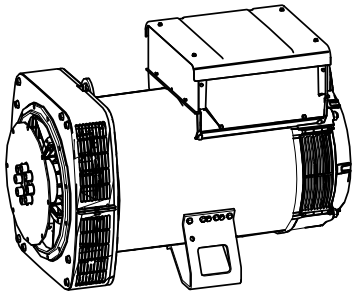

Alternator Manufacturer/Brand ..... Leroy Somer
Alternator Model LSA47.3M8
Exciter..... Brushless
Cooling Fan ..... Cast alloy aluminum
Windings.....100% copper
Insulation Class ..... H
Winding Pitch.....2/3
Terminals 12
Drip Proof IP23
Altitude.....≤1000m
Overspeed .....2250 rpm
Air Flow..... 0.9m³/s(50HZ),1.1m³/s(60HZ)
Voltage Regulation .....±0.5%
Total harmonic TGH / THCat no load < 1.5 % - on load<2.%
Telephone Interference..... THF<2%;TIF<50

PLC-500 Control System

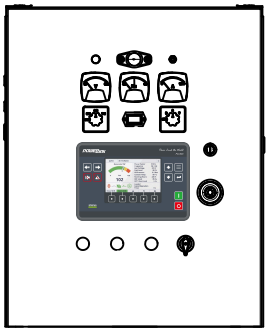

PLC-500 is a microprocessor based control unit containing all necessary functions for protection of the genset and the breaker control. Furthermore, it contains all necessary three-phase measuring circuits and presents all values and alarms on the LCD display. The module has the function of load sharing which enables the module to share the active load (kW) equally when operating in parallel with other gensets. The load sharing is performed so each genset takes a portion of the load that is calculated in percent according to the nominal power.

- Microprocessor control, with high stability and credibility
- Monitoring and measuring operational parameters of the genset
- Indicating operation status, fault conditions, all parameters and alarms
- Multiple protections; multiple parameters display, like pressure, temp. etc.
- Manual, automatic and remote work mode selectable
- RS232 & RS485 can be used at the same time
- Real time clock for time and date display, overall runtime display, 250 log entries

4 Overall Dimensions

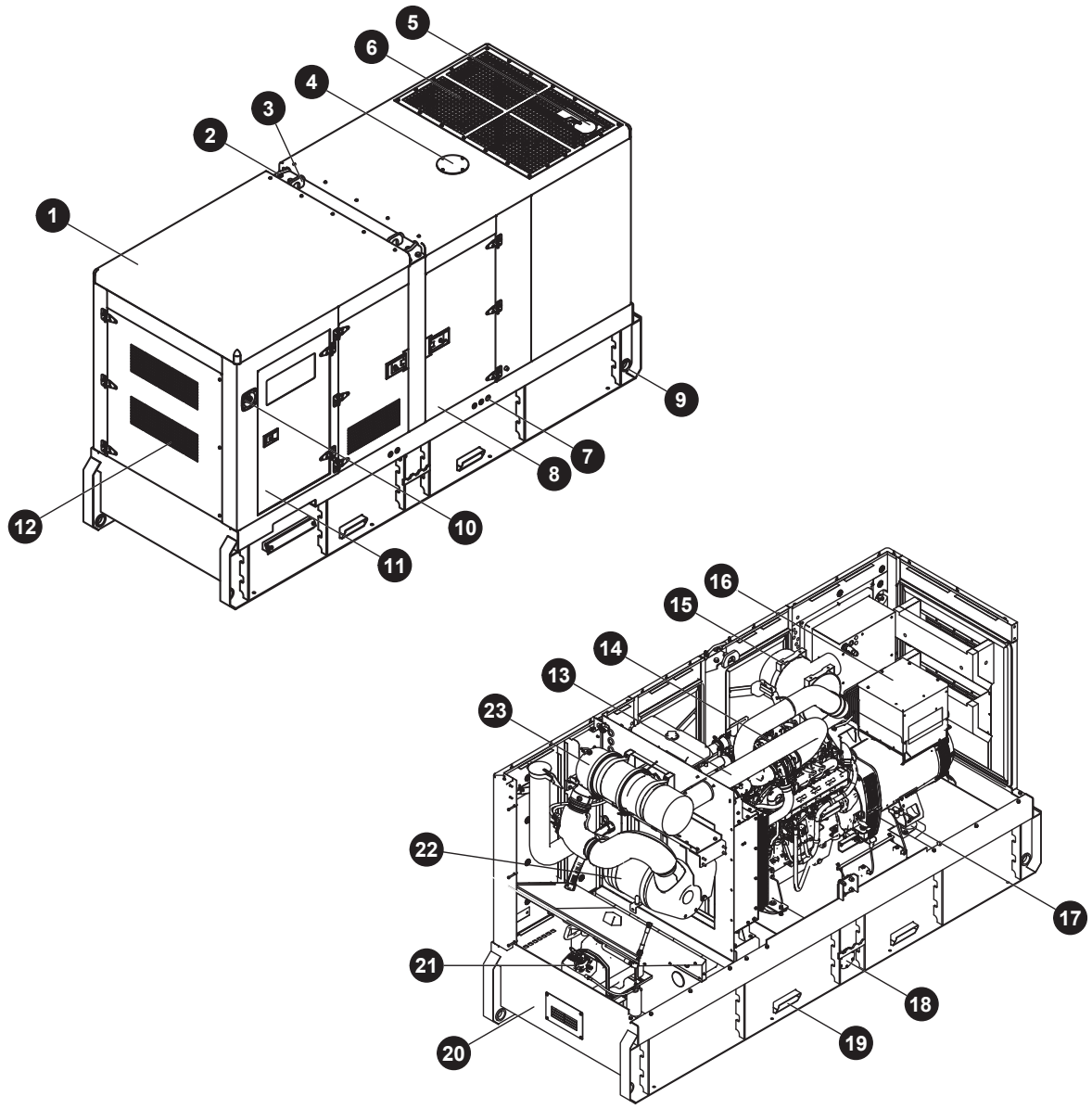

1. Soundproof canopy
2. Roping lug
3. Lifting lug
4. Coolant water inlet
5. Exhaust gas outlet
6. Air outlet
7. External fuel connector
8. Access door
9. Dragging hole
10. Emergency stop button
11. Control cabinet
12. Air Inlet
13. Exhaust pipe
14. Engine
15. Air cleaner
16. Alternator
17. Vibration isolator
18. Fuel drain
19. Fork lift channel
20. Base frame
21. DEF tank
22. SCR
23. DOC

5 Control System

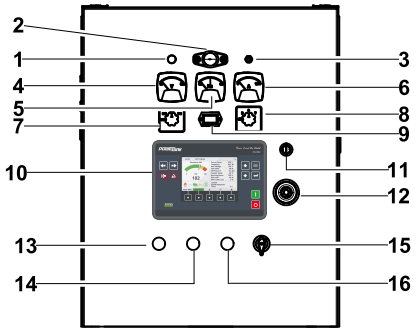

Control cabinet

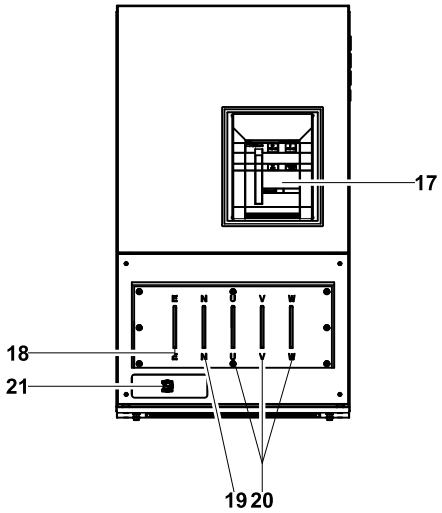

Field wiring cabinet

Ref.	Description
1	Charge indicator
2	Control cabinet lamp
3	Control cabinet lamp switch
4	Voltage meter
5	Frequency meter
6	Current meter
7	Changerover switch-Voltage
8	Changerover switch-Current
9	Time counter
10	Control module
11	Key switch
12	Emergency stop switch
13	GCB closed indicator
14	GCB opened indicator
15	Control power switch
16	Alarm reset button
17	Main circuit breaker
18	Ground wire terminal
19	Neutral wire terminal
20	Live wire terminals
21	Paralleling connector with the mains

1000035851–A1–E
09.2023

Specification may change without prior notice. For more info., contact Power Link or your local distributors please.

©2023 POWERLINK