POWERLINK
Power Systems

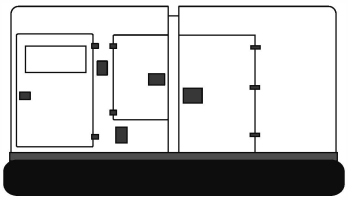

Generator set
Sound-proof type
E1340VS-T

SPECIFICATIONS

www.powerlinkworld.com

T5F series
E1340VS-T, Tier 5 Final
60 Hz @ 1800rpm,3-phase/4-wiring

1 Standards & Conditions

Design Standards

The designs and the productions are in conformity with:

- Conformite Europeenne (CE)
- ISO8528-5:2005
- GB/T2820.5-2009

Electrical devices have obtained the certification of:

- CSA
- UL

Environmental Operating Conditions

- Installation place: Outdoors or indoors (well ventilated).
- Ambient temperature: -25℃ to 50℃. The coolant heater is needed when the temperature is below 5℃
- Humidity: Less than 80%.
- Altitude: Below one thousand (1000) meters.

Factory Inspection

- Inspection items.
- Protection devices working test.
- Starting ability in normal temperature.
- 50% rated power load moment capability.
- Voltage deviation and speed variation: 0%, 25%, 50%, 75%, 100%, 110% Load.

Painting Process

- Painting process specifications and colors are based on the manufacturer's standard.
- The customer could also choose the color which the manufacturer offers.

2 General Features

- Volvo engine TAD1683GE
- Close coupled to Leroy Somer alternator LSA47.3L10
- Intelligent control module PLC-500
- ABB main circuit breaker: 2500A
- Rotate speed governor: ECU
- Exhaust gas purification system with DOC and SCR
- Excitation system: Self excited, SHUNT
- Key switch
- Emergency stop switch
- ATS (automatic transfer switch) receptacle
- 2x12V/150AH battery and charger
- Lockable battery isolator switch
- Power coated canopy
- 50℃ radiator
- Oil pump on the engine
- Steel base frame
- Vibration isolators between the engine/alternator and base frame
- Dry type air filter
- Base fuel tank for 8 hours running
- Drain points for fuel tank
- Operation Manual / Specifications

3 Equipment Specification

General technical data

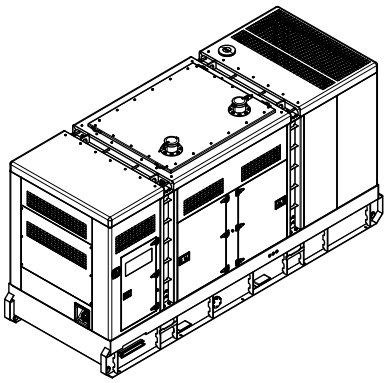

Model..... E1340VS-T

Structure type .....C/TWINS

Tank capacity.....2000L

Dry weight..... 8900kg

Sound pressure level @7m 76dBA

Dimensions L×W×H.....6058x2438x2591mm

Prime Power 1320kVA/1056kW

Standby Power 1375kVA/1100kW

Voltage	416V	440V	460V	480V
Ampere	1832.0	1732.1A	1656.8A	1587.8A

Genset Fuel Consumption					
Frequency/Load	25%	50%	75%	100%	110%
60Hz (L/h)	70.6	125.4	181.8	242.2	269.4

Power System

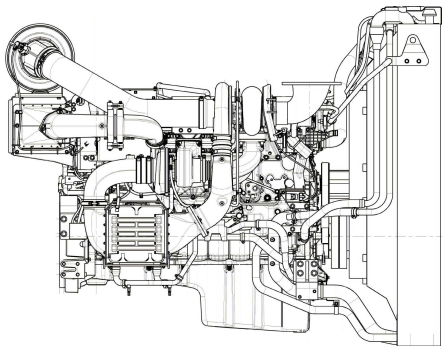

Engine Manufacturer/Brand.....Volvo
Engine Model..... TAD1683GE
Dimensions L×W×H.....1550×1320×1465mm
Dry Weigh (approx.) 1810Kg
Number of Cylinders.....6
Bore 144mm
Stroke 165mm
Displacement.....16.12L
Compression Ratio 16.8
Type of injection..... High pressure common rail
Intake System..... Turbocharged
Intake Resistance .....≤5.0kPa
Cooling System .....Water cooled
Fan ..... Pusher
Battery Voltage 24V
Type of Fuel..... Ultra Low Sulfur Fuel Only
Type of Oil .....Class CJ-4/CK-4 oil as per API classification
Oil Capacity 42.0L
Type of Coolant ..... Glycol mixture
Coolant Capacity (Engine only).....33.0L
Back Pressure .....≤19.0kPa
Standby Power 685kW
Prime Power 625kW
Fuel Consumption(100%load) 121.1L/h

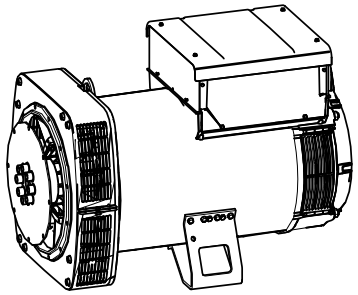

Alternator Manufacturer/Brand ..... Leroy Somer
Alternator Model LSA47.3L10
Exciter..... Brushless
Cooling Fan ..... Cast alloy aluminum
Windings.....100% copper
Insulation Class ..... H
Winding Pitch.....2/3
Terminals 12
Drip Proof IP23
Altitude.....≤1000m
Overspeed .....2250 rpm
Air Flow..... 0.9m³/s(50HZ),1.1m³/s(60HZ)
Voltage Regulation .....±0.5%
Total harmonic TGH / THCat no load < 1.5 % - on load < 2%
Telephone Interference..... THF<2%;TIF<50

PLC-500 Control System

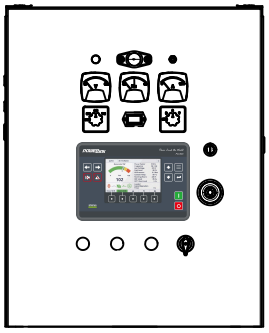

PLC-500 is a microprocessor based control unit containing all necessary functions for protection of the genset and the breaker control. Furthermore, it contains all necessary three-phase measuring circuits and presents all values and alarms on the LCD display. The module has the function of load sharing which enables the module to share the active load (kW) equally when operating in parallel with other gensets. The load sharing is performed so each genset takes a portion of the load that is calculated in percent according to the nominal power.

- Microprocessor control, with high stability and credibility
- Monitoring and measuring operational parameters of the genset
- Indicating operation status, fault conditions, all parameters and alarms
- Multiple protections; multiple parameters display, like pressure, temp. etc.
- Manual, automatic and remote work mode selectable
- RS232 & RS485 can be used at the same time
- Real time clock for time and date display, overall runtime display, 250 log entries

4 Overall Dimensions

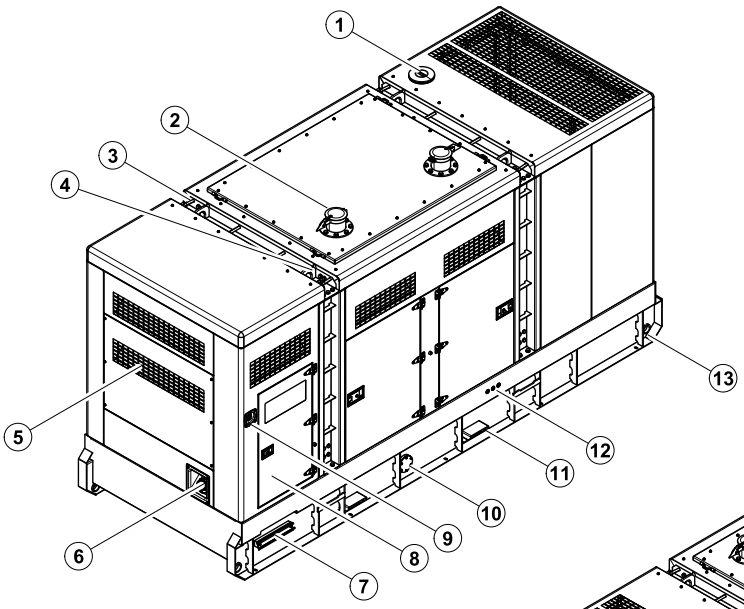

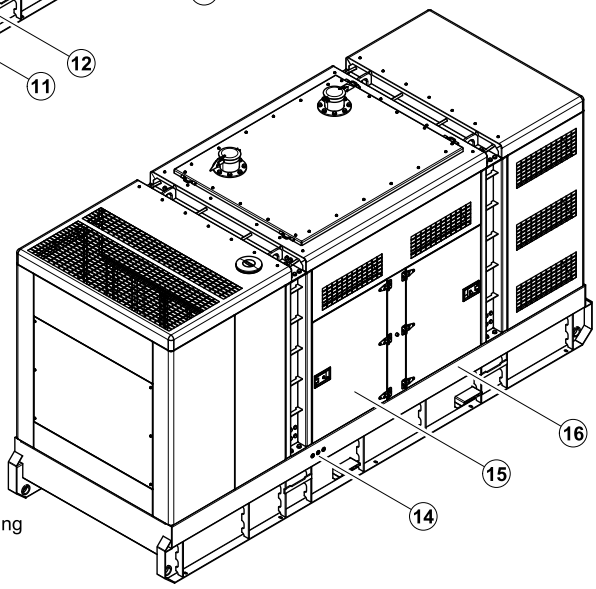

8	Control cabinet	16	Base frame
7	Cable trench	15	Access door
6	Fuel inlet	14	Coolant/Oil drain hose fitting
5	Air inlet	13	Tie down
4	Lifting lug	12	External fuel inlet/return hose fitting
3	Roping lug	11	Fork lift channel
2	Exhaust gas outlet	10	Fuel drain
1	Coolant inlet	9	Emergency stop switch

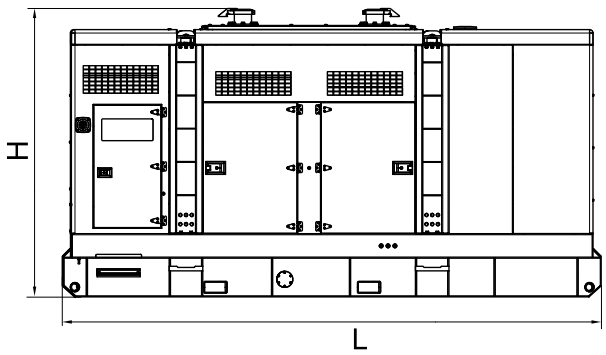

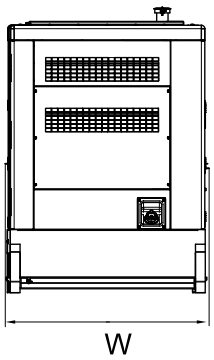

5 Control System

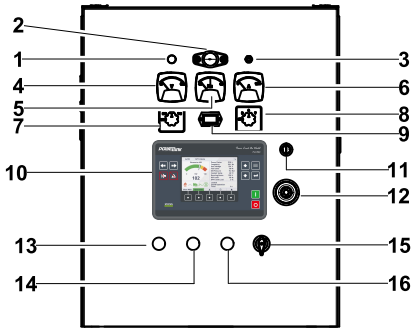

Control cabinet

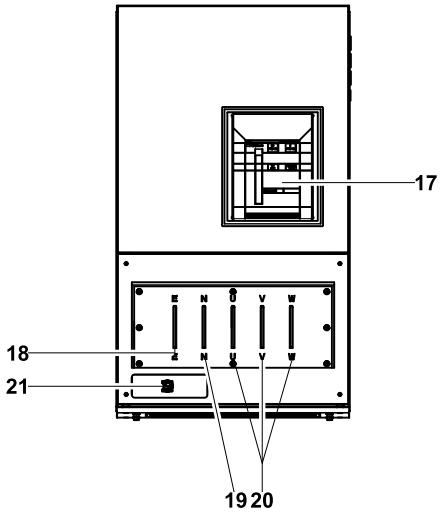

Field wiring cabinet

Ref.	Description
1	Charge indicator
2	Control cabinet lamp
3	Control cabinet lamp switch
4	Voltage meter
5	Frequency meter
6	Current meter
7	Changerover switch-Voltage
8	Changerover switch-Current
9	Time counter
10	Control module
11	Key switch
12	Emergency stop switch
13	GCB closed indicator
14	GCB opened indicator
15	Control power switch
16	Alarm reset button
17	Main circuit breaker
18	Ground wire terminal
19	Neutral wire terminal
20	Live wire terminals
21	Paralleling connector with the mains

1000035852–A1–E
09.2023

Specification may change without prior notice. For more info., contact Power Link or your local distributors please.

©2023 POWERLINK