POWERLINK
Power Systems

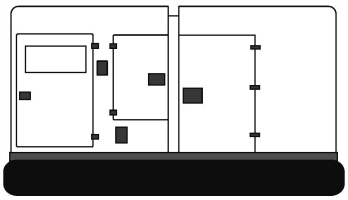

Generator set

Sound-proof type

E14KS

SPECIFICATIONS

www.powerlinkworld.com

T5F series
E14KS, Tier 5 Final
60 Hz @ 1800rpm,3-phase/5-wiring

1 Standards & Conditions

Design Standards

The designs and the productions are in conformity with:

- Conformite Europeenne (CE)
- ISO8528-5:2005
- GB/T2820.5-2009

Electrical devices have obtained the certification of:

- CSA
- UL

Environmental Operating Conditions

- Installation place: Outdoors or indoors (well ventilated).
- Ambient temperature: -25℃ to 50℃. The coolant heater is needed when the temperature is below 5℃
- Humidity: Less than 80%.
- Altitude: Below one thousand (1000) meters.

Factory Inspection

- Inspection items.
- Protection devices working test.
- Starting ability in normal temperature.
- 50% rated power load moment capability.
- Voltage deviation and speed variation: 0%, 25%, 50%, 75%, 100%, 110% Load.

Painting Process

- Painting process specifications and colors are based on the manufacturer's standard.
- The customer could also choose the color which the manufacturer offers.

2 General Features

- Kubota engine D1703-M-E4BG2
- Close coupled to Leroy Somer alternator LSA40S3
- Intelligent control module PLC-7420
- ABB main circuit breaker: 32A
- Rotate speed governor: Mechanical governor
- Exhaust gas purification system with EGR and DOC
- Excitation system: Self excited, SHUNT
- Key switch
- Emergency stop switch
- ATS (automatic transfer switch) receptacle
- 1x12V/72AH battery and charger
- Lockable battery isolator switch
- Power coated canopy
- 50℃ radiator
- Oil pump on the engine
- Steel base frame
- Vibration isolators between the engine/alternator and base frame
- Dry type air filter
- Base fuel tank for 25 hours running
- Drain points for fuel tank
- Operation Manual / Specifications

3 Equipment Specification

General technical data

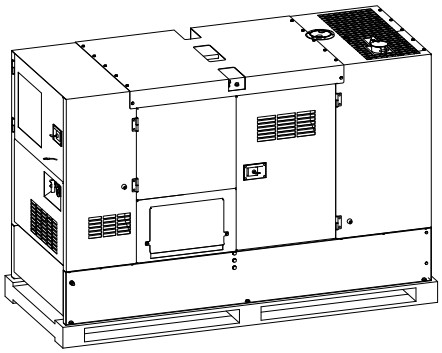

Model..... E14KS

Structure type ..... RS

Tank capacity..... 100L

Dry weight..... 885kg

Sound pressure level @7m 64.8dBA

Dimensions L×W×H.....2042x1026x1353mm

Prime Power 14kVA/11.2kW

Standby Power 15kVA/12.3kW

Voltage	208V	220V	230V	240V
Ampere	42.7A	40.4A	38.6A	37.0A

Genset Fuel Consumption					
Frequency/Load	25%	50%	75%	100%	110%
60Hz (L/h)	N/A	2.0	3.0	3.9	4.3

Power System

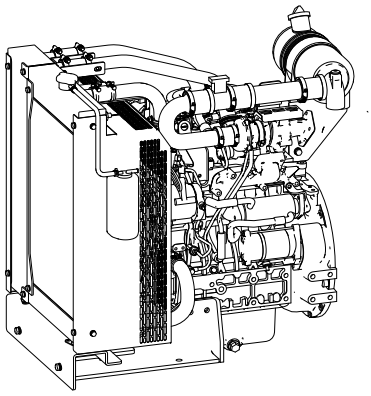

Engine Manufacturer/Brand.....Kubota
Engine Model..... D1703-M-E4BG2
Dimensions L×W×H.....574×486×643mm
Dry Weigh (approx.) 170Kg
Number of Cylinders.....3
Bore 87.0mm
Stroke 92.4mm
Displacement.....1.647L
Compression Ratio 22.0
Type of injection.....Throttle type
Intake System..... Naturally Aspirated
Intake Resistance .....≤ 4.9kPa
Cooling System .....Water cooled
Fan ..... Pusher
Battery Voltage 12V
Type of Fuel.....No.2-D S15, Ultra Low Sulfur Fuel Only
Type of Oil .....Class CJ-4/CK-4 oil as per API classification
Oil Capacity 7.6L
Type of Coolant ..... Glycol mixture
Coolant Capacity 5.5L
Back Pressure .....≤7.1kPa
Prime Power.....15kW
Fuel Consumption(100%load).....3.9L/h

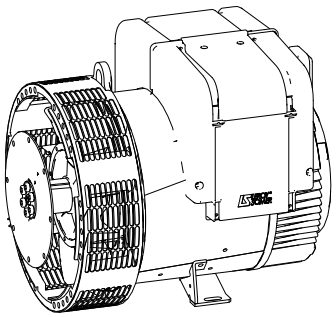

Alternator Manufacturer/Brand ..... Leroy Somer
Alternator Model LSA40S3
Exciter..... Brushless
Cooling Fan ..... Cast alloy aluminum
Windings.....100% copper
Insulation Class ..... H
Winding Pitch.....2/3
Terminals 12
Drip Proof IP23
Altitude.....≤1000m
Overspeed .....2250 rpm
Air Flow..... 0.06m³/s(50HZ),0.072m³/s(60HZ)
Voltage Regulation .....±0.5%
Total harmonic TGH / THCat no load < 3% - on load < 2%
Telephone Interference..... THF<2%;TIF<50

PLC-7420 Control System

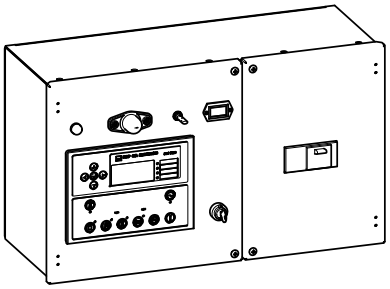

PLC-7420 is an advanced control module based on microprocessor, containing all necessary functions for protection of the genset and the breaker control. It can monitor the mains supply, and automatically start the engine when the mains is abnormal. Accurately measure various operational parameters and display all values and alarms information on the LCD. In addition, the control module can automatically shut down the engine and indicate the engine failure.

- Microprocessor control, with high stability and credibility
- Monitoring and measuring operational parameters of the mains supply and genset
- Indicating operation status, fault conditions, all parameters and alarms
- Multiple protections; multiple parameters display, like pressure, temp. etc.
- Manual, automatic and remote work mode selectable
- Real time clock for time and date display, overall runtime display, 250 log entries
- Overall power output display
- Integral speed/frequency detecting, telling status of start, rated operation, overspeed etc.
- Communication with PC via RS485 OR RS232 interface, using MODBUS protocol

4 Overall Dimensions

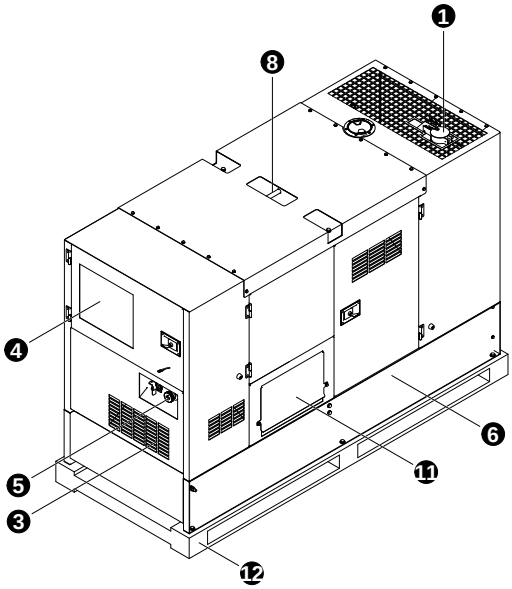

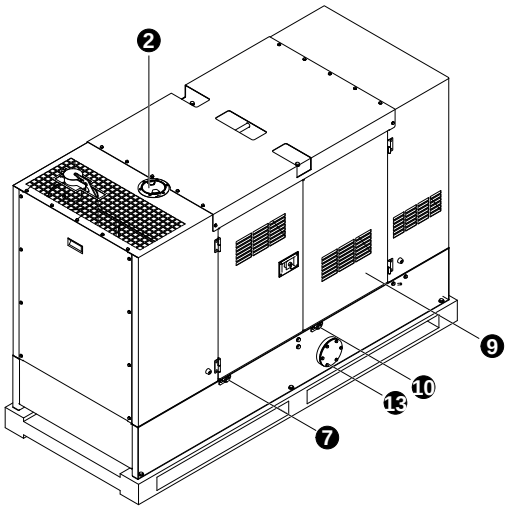

(8) Lifting lug
(7) Coolant drain hose fitting
(6) Base frame
(5) Emergency stop switch
(4) Control cabinet
(3) Air inlet
(2) Coolant inlet
(1) Exhaust gas outlet
(13) Fuel drain
(12) Wooden tray
(11) Cable trench
(10) Oil drain hose fitting
(9) Access door

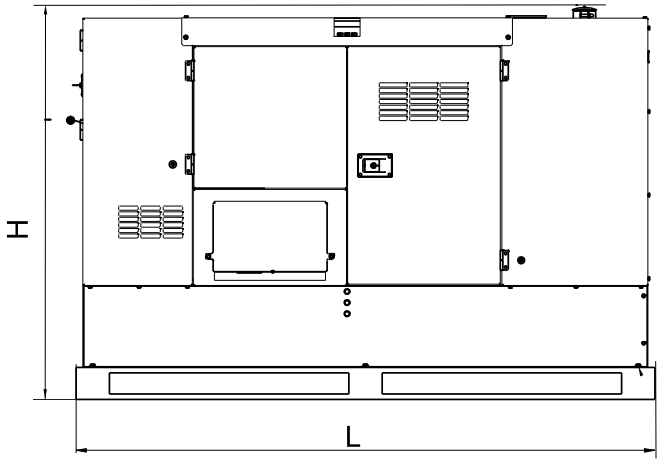

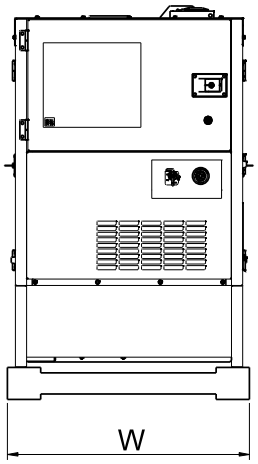

5 Control System

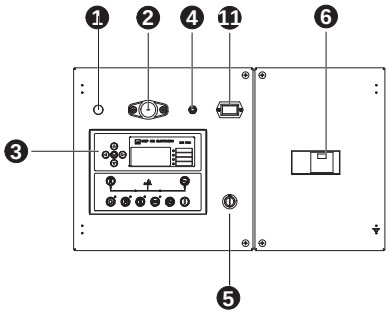

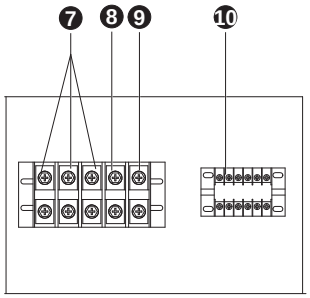

Control & field wiring cabinet

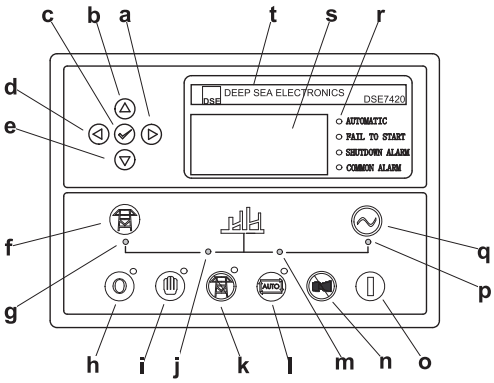

Control module

Ref.	Description
1	Charge indicator
2	Control cabinet lamp
3	Control module
4	Control cabinet lamp switch
5	Key switch
6	Main circuit breaker
7	Live wire terminal
8	Neutral wire terminal
9	Ground wire terminal
10	Remote control/Mains input
11	Time counter

a	Button (next page)
b	Button (increase value / previous item)
c	Button (accept)
d	Button (previous page)
e	Button (decrease value / next item)
f	Button (transfer the load to the mains supply, when in Manual mode only)
g	Mains supply available LED
h	Stop / Reset button
i	Manual button (Manual control mode)
j	Mains supply on load LED
k	Test button (Test mode)
l	Auto button (Auto mode)
m	Genset on load LED
n	Mute/Lamp test button
o	Start button (Manual)
p	Genset available LED
q	Button (transfer the load to the genset, when in Manual mode only)
r	Alarm LED (4 alarm items)
s	LCD display
t	Control module name

1000093610-IT1-F2

1000035540–A1–E
09.2023

Specification may change without prior notice. For more info., contact Power Link or your local distributors please.

©2023 POWERLINK