POWERLINK
Power Systems

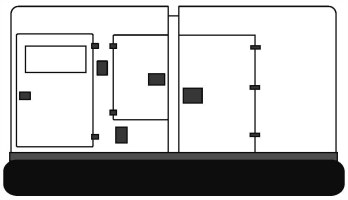

Generator set
Sound-proof type
E53JS

SPECIFICATIONS

www.powerlinkworld.com

T5F series
E53JS, Tier 5 Final
60 Hz @ 1800rpm,3-phase/5-wiring

1 Standards & Conditions

Design Standards

The designs and the productions are in conformity with:

- Conformite Europeenne (CE)
- ISO8528-5:2005
- GB/T2820.5-2009

Electrical devices have obtained the certification of:

- CSA
- UL

Environmental Operating Conditions

- Installation place: Outdoors or indoors (well ventilated).
- Ambient temperature: -25℃ to 50℃. The coolant heater is needed when the temperature is below 5℃
- Humidity: Less than 80%.
- Altitude: Below one thousand (1000) meters.

Factory Inspection

- Inspection items.
- Protection devices working test.
- Starting ability in normal temperature.
- 50% rated power load moment capability.
- Voltage deviation and speed variation: 0%, 25%, 50%, 75%, 100%, 110% Load.

Painting Process

- Painting process specifications and colors are based on the manufacturer's standard.
- The customer could also choose the color which the manufacturer offers.

2 General Features

- Johndeere engine 3029HG530
- Close coupled to Leroy Somer alternator LSA42.3L9
- Intelligent control module PLC-7420
- ABB main circuit breaker: 160A
- Rotate speed governor: ECU
- Exhaust gas purification system with DOC
- Excitation system: Self excited, SHUNT
- Key switch
- Emergency stop switch
- ATS (automatic transfer switch) receptacle
- 1x12V/72AH battery and charger
- Lockable battery isolator switch
- Power coated canopy
- 50℃ radiator
- Oil pump on the engine
- Steel base frame
- Vibration isolators between the engine/alternator and base frame
- Dry type air filter
- Base fuel tank for 24 hours running
- Drain points for fuel tank
- Operation Manual / Specifications

3 Equipment Specification

General technical data

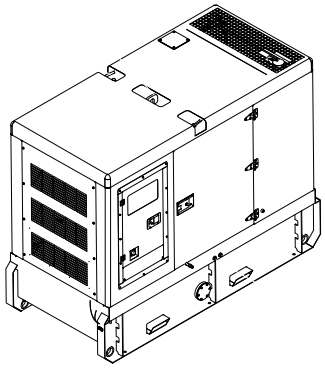

Model..... E53JS

Structure type ..... R

Tank capacity..... 100L

Dry weight..... 1626kg

Sound pressure level @7m 71dBA

Dimensions L×W×H.....2300x1115x1733mm

Prime Power 53kVA/43kW

Standby Power 59kVA/47kW

Voltage	208V	220V	230V	240V
Ampere	163.8A	154.8A	148.1A	141.9A

Genset Fuel Consumption					
Frequency/Load	25%	50%	75%	100%	110%
60Hz (L/h)	3.8	5.6	7.3	9.3	11.5

Power System

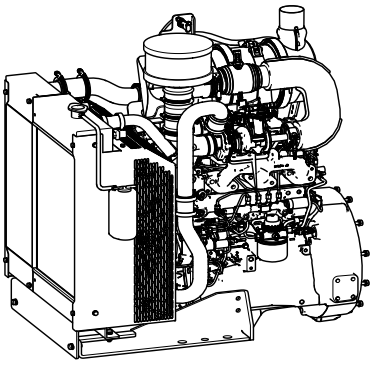

Engine Manufacturer/Brand.....Johndeere
Engine Model..... 3029HG530
Dimensions L×W×H.....715×596×956mm
Dry Weigh (approx.) 400Kg
Number of Cylinders.....3
Bore 107mm
Stroke 110mm
Displacement.....2.9L
Compression Ratio 16.9
Type of injection..... High pressure common rail
Intake System..... Turbocharged
Intake Resistance .....≤6.25kPa
Cooling System .....Water cooled
Fan ..... Pusher
Battery Voltage 12V
Type of Fuel..... Ultra Low Sulfur Fuel Only
Type of Oil .....Class CJ-4/CK-4 oil as per API classification
Oil Capacity 10.2L
Type of Coolant ..... Glycol mixture
Coolant Capacity (only engine).....5.0L
Back Pressure .....≤10.0kPa
Standby Power 55kW
Prime Power 50kW
Fuel Consumption(100%load) 11.5L/h

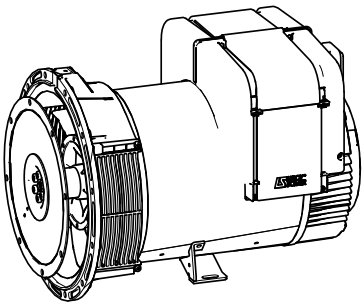

Alternator Manufacturer/Brand ..... Leroy Somer
Alternator Model LSA42.3L9
Exciter..... Brushless
Cooling Fan ..... Cast alloy aluminum
Windings.....100% copper
Insulation Class ..... H
Winding Pitch.....2/3
Terminals 12
Drip Proof IP23
Altitude.....≤1000m
Overspeed .....2250 rpm
Air Flow..... 0.10m³/s(50HZ),0.13m³/s(60HZ)
Voltage Regulation .....±0.5%
Total harmonic TGH / THCat no load < 3 % - on load < 2%
Telephone Interference..... THF<2%;TIF<50

PLC-7420 Control System

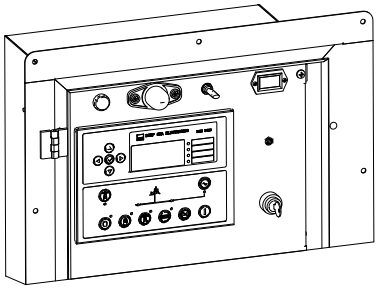

PLC-7420 is an advanced control module based on microprocessor, containing all necessary functions for protection of the genset and the breaker control. It can monitor the mains supply, and automatically start the engine when the mains is abnormal. Accurately measure various operational parameters and display all values and alarms information on the LCD. In addition, the control module can automatically shut down the engine and indicate the engine failure.

- Microprocessor control, with high stability and credibility
- Monitoring and measuring operational parameters of the mains supply and genset
- Indicating operation status, fault conditions, all parameters and alarms
- Multiple protections; multiple parameters display, like pressure, temp. etc.
- Manual, automatic and remote work mode selectable
- Real time clock for time and date display, overall runtime display, 250 log entries
- Overall power output display
- Integral speed/frequency detecting, telling status of start, rated operation, overspeed etc.
- Communication with PC via RS485 OR RS232 interface, using MODBUS protocol

4 Overall Dimensions

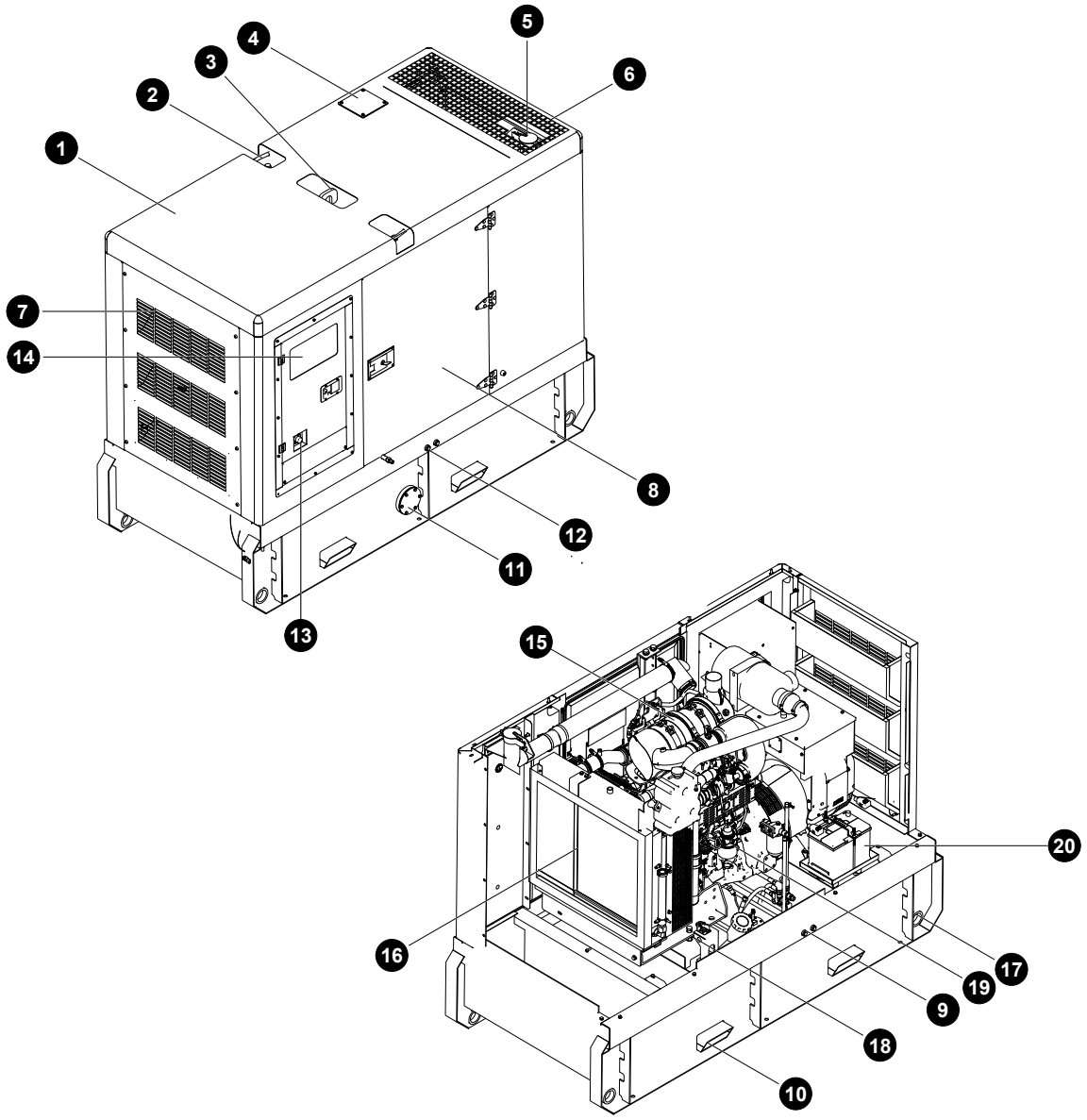

1. Soundproof canopy
2. Roping lug
3. Lifting lug
4. Coolant inlet
5. Exhaust outlet
6. Air outlet
7. Air inlet
8. Access door
9. Connetor for external fuel tank
10. Fork lift channel
11. Fuel drain
12. Oil/water drain
13. Emergency stop button
14. Control cabinet
15. DOC
16. Radiator
17. Dragging hole
18. Vibration isolator
19. Fuel filter
20. Battery

5 Control System

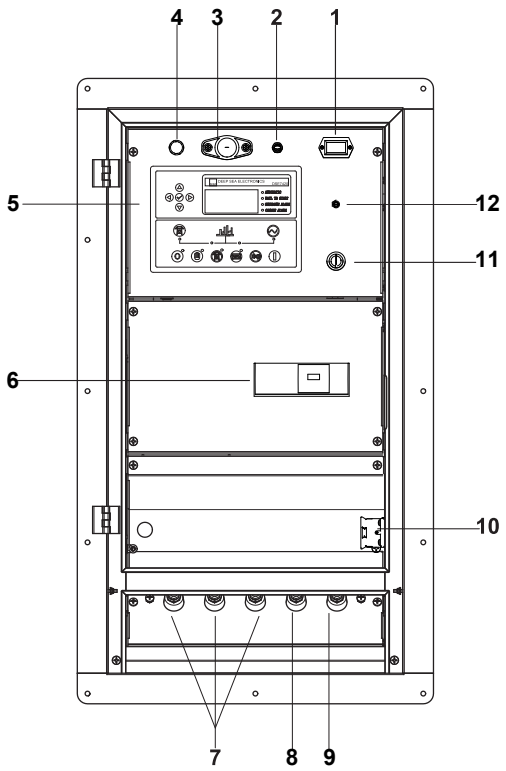

Control & field wiring cabinet

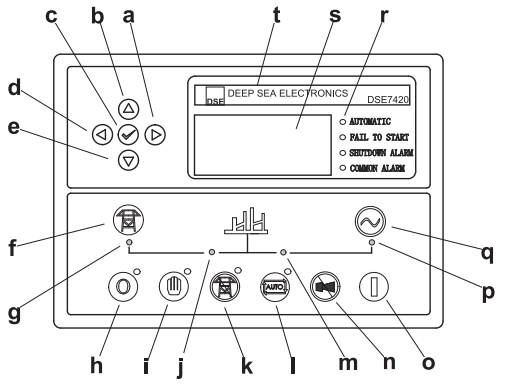

Control module

Ref.	Description
1	Time counter
2	Control panel lamp switch
3	Control panel lamp
4	Charge indicator
5	Control module
6	Main circuit breaker
7	Live wire terminals
8	Neutral wire terminal
9	Ground wire terminal
10	Mains input/ remote/AMF communication connector
11	Key switch
12	Voltage adjusting knob

a	Button (next page)
b	Button (increase value / previous item)
c	Button (accept)
d	Button (previous page)
e	Button (decrease value / next item)
f	Button (transfer the load to the mains supply, when in Manual mode only)
g	Mains supply available LED
h	Stop / Reset button
i	Manual button (Manual control mode)
j	Mains supply on load LED
k	Test button (Test mode)
l	Auto button (Auto mode)
m	Genset on load LED
n	Mute/Lamp test button
o	Start button (Manual)
p	Genset available LED
q	Button (transfer the load to the genset, when in Manual mode only)
r	Alarm LED (4 alarm items)
s	LCD display
t	Control module name

1000035544–A1–E
09.2023

Specification may change without prior notice. For more info., contact Power Link or your local distributors please.

©2023 POWERLINK