POWERLINK
Energy Systems

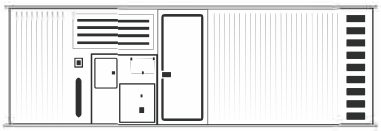

Generator set

Containerized type

HVM1728S

SPECIFICATIONS

www.powerlinkenergy.com

HV series
HVM1728S
50 Hz @ 1500rpm, 10500V

1 Standards & Conditions

Design Standards

The designs and the productions are in conformity with:

- Conformite Europeenne (CE)
- ISO8528-5:2005
- GB/T2820.5-2009

Environmental Operating Conditions

- Installation place: Outdoors or indoors (well ventilated).
- Ambient temperature: -25℃ to 50℃.The coolant heater is needed when the temperature is below 5℃
- Humidity: Less than 80%.
- Altitude: Below one thousand (1000) meters.

Factory Inspection

- Inspection items.
- Protection devices working test.
- Starting ability in normal temperature.
- 50% rated power load moment capability.
- Voltage deviation and speed variation: 0%, 25%, 50%, 75%, 100%, 110% Load.

Painting Process

- Painting process specifications and colors are based on the manufacturer's standard.
- The customer could also choose the color which the manufacturer offers.

2 General Features

- MITSUBISHI engine S16R-PTA-C
- Close coupled to Leroy Somer alternator LSA53.2VL6
- Microprocessor control module PLC-500
- HV Switchgear Panel (optional) : ABB 630A
- PT Cabinet (optional)
- DC Power Cabinet (optional)
- Rotate speed governor: Electrical governor
- Excitation System: AREP
- A.V.R. Model: R448
- Key switch
- Emergency stop switch
- 4x12V/200AH sealed for life maintenance free battery
- Lockable battery isolator switch
- Powder coated canopy
- 50℃ radiator
- Fire extinguisher
- Heat exchanger
- Coolant heater
- Oil pump on the engine
- Steel base frame with forkslots
- Vibration isolators between the engine/alternator and base frame
- Dry type air filter
- Drain points for fuel tank
- Fuel inlet pump and it's control box for the fuel tank
- Added fuel-water separator for fuel tank
- Operation Manual / Specifications

3 Equipment Specification

General technical data

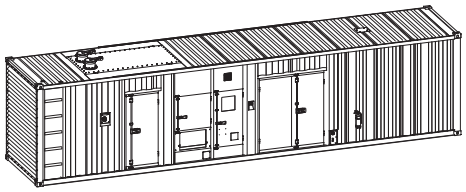

Model..... HVM1728S
Structure type C
Fuel tank.....2400L
Dry weight.....24500kg
Noise level @7m 84dAB
Dimensions L×W×H.....12192x2438x3153mm
Standby Power 1900kVA/1520kW
Prime Power..... 1728kVA/1382kW
Voltage/Ampere..... 10500V/95A

Genset Fuel Consumption					
Frequency/Load	25%	50%	75%	100%	110%
50Hz (L/h)	90	176	263	351	387

Diesel Engine

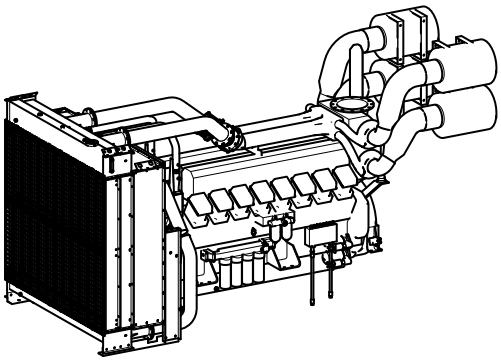

Engine Manufacturer/Brand	MITSUBISHI
Engine Model	S16R-PTA-C
Dimensions L×W×H	4125×2216×2458mm
Dry Weigh (approx.)	6750kg
Number of Cylinders	16
Bore	170mm
Stroke	180mm
Displacement	65.4L
Type of injection	Direct injection
Intake System	Turbocharged
Intake Resistance	≤6.2kPa
Cooling System	Water cooled
Fan	Pusher
Battery Voltage	24V
Type of Fuel	No. 2 diesel or ASTM D2
Type of Oil	15W40 to API CH4
Oil Capacity	230L
Type of Coolant	Glycol mixture
Coolant Capacity	170L
Back Pressure	≤6.8kPa
Standby Power	1620kW
Prime Power	1480kW

HV Alternator

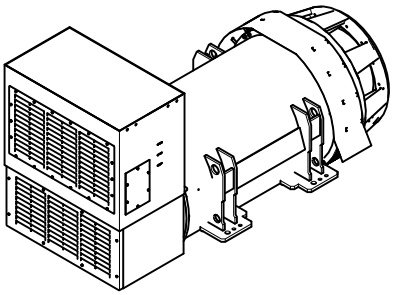

Alternator Manufacturer/Brand	Leroy Somer
Alternator Model	LSA53.2VL6
Exciter	Brushless
Cooling Fan	Cast alloy aluminum
Windings	100% copper
Insulation Class	H
Winding Pitch	5/6
Terminals	6
Drip Proof	IP23
Altitude	≤1000m
Overspeed	2250rpm
Air Flow	2.5m³/s
Voltage Regulation	±0.5%
Total harmonic TGH / THC	< 3.5%
Telephone Interference	FHT<2%;TIF<50

PLC-500 Control System

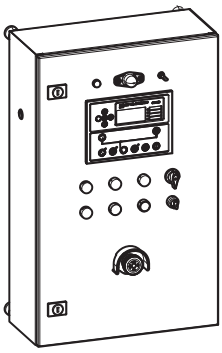

PLC-500 is a microprocessor based control unit containing all necessary functions for protection of the genset and the breaker control. Furthermore, it contains all necessary three-phase measuring circuits and presents all values and alarms on the LCD display. The module has the function of load sharing which enables the module to share the active load (kW) equally when operating in parallel with other gensets. The load sharing is performed so each genset takes a portion of the load that is calculated in percent according to the nominal power.

- Microprocessor control, with high stability and credibility
- Monitoring and measuring operational parameters of the genset
- Indicating operation status, fault conditions, all parameters and alarms
- Multiple protections; multiple parameters display, like pressure, temp. etc.
- Manual, automatic and remote work mode selectable
- RS232 & RS485 can be used at the same time
- Real time clock for time and date display, overall runtime display, 250 log entries

4 Overall Dimensions

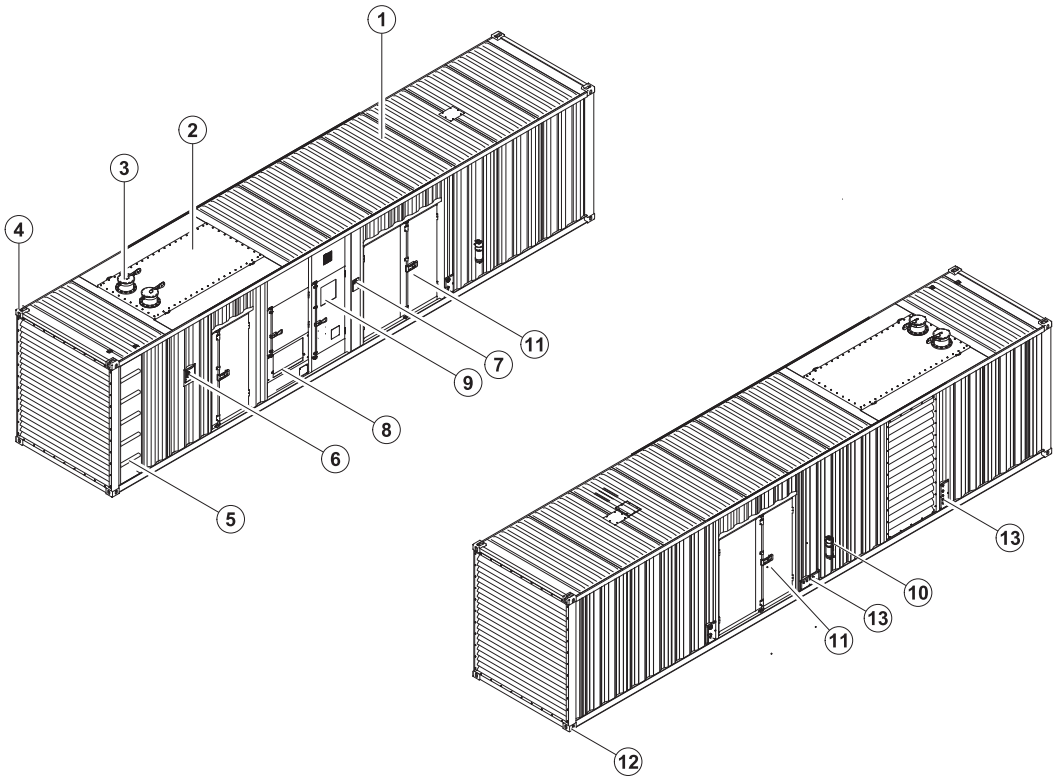

7 Emergency stop switch
6 Fuel inlet
5 Ladder
4 Lifting lug
3 Exhaust gas outlet
2 Muffler
1 Canopy

13 External fuel inlet/return hose fitting
Coolant/Oil drain hose fitting
12 Fixing lug
11 Access door
10 Fire extinguisher
9 Control cabinet
8 Cable trench

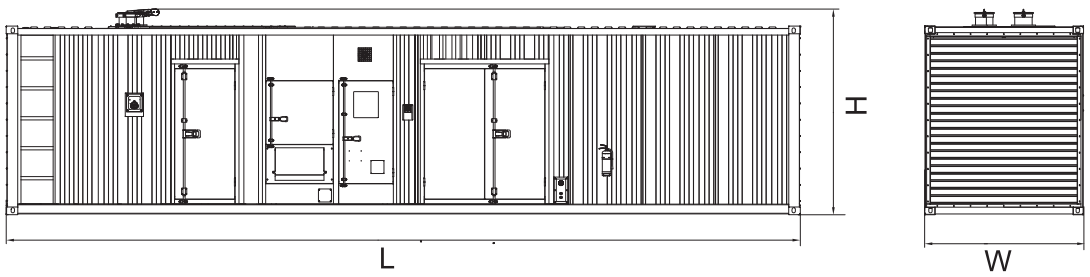

5 Switchgear Panel (optional)

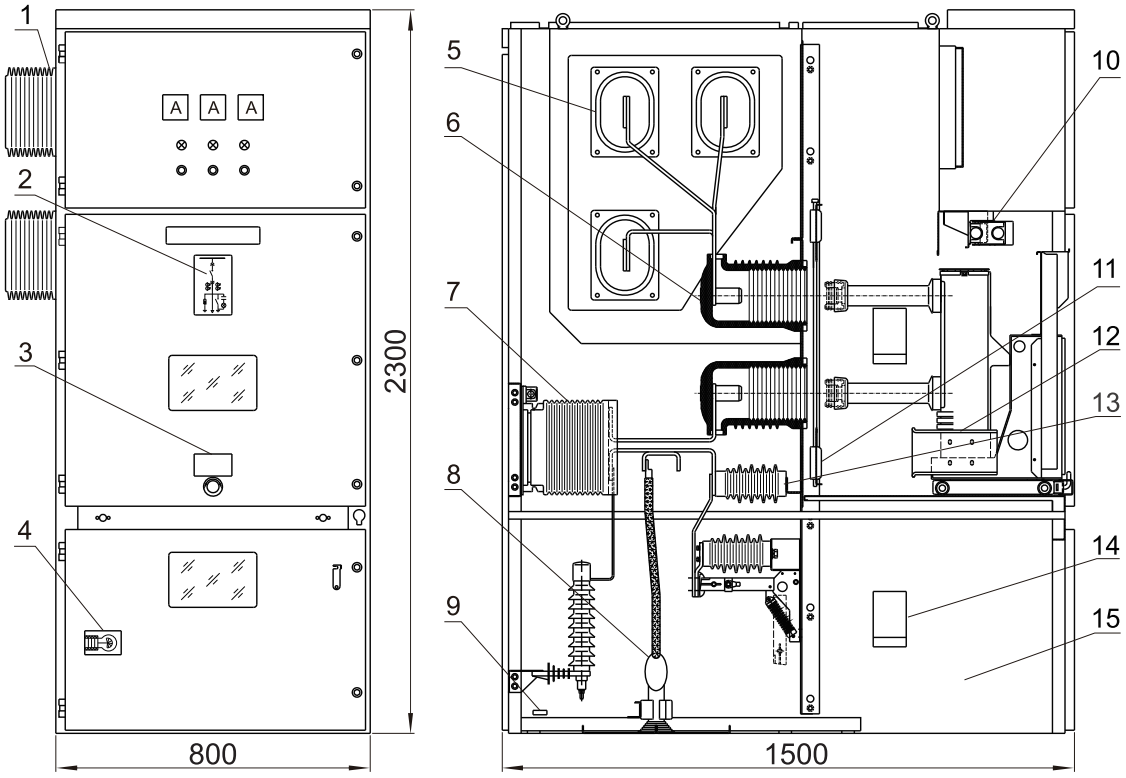

1.Passing bushing 2. Primary diagram 3. Nameplate 4. Lighting lamp 5. Main bus
6. Contact box 7. CT 8. Incoming cable 9. Earthing bus bar 10. Secondary interlocking device
11. Valve mechanism 12. CB trolley 13. Insulator 14. Heater 15. Frame

1000032080-A2–E
09.2024

Specification may change without prior notice. For more info., contact Power Link or your local distributors please.

©2024 POWERLINK